		acc. to drawing number
ISRI 6830 KA/ 877 NTS LH	**NCS 4pt belt**	**812763-02**

Features
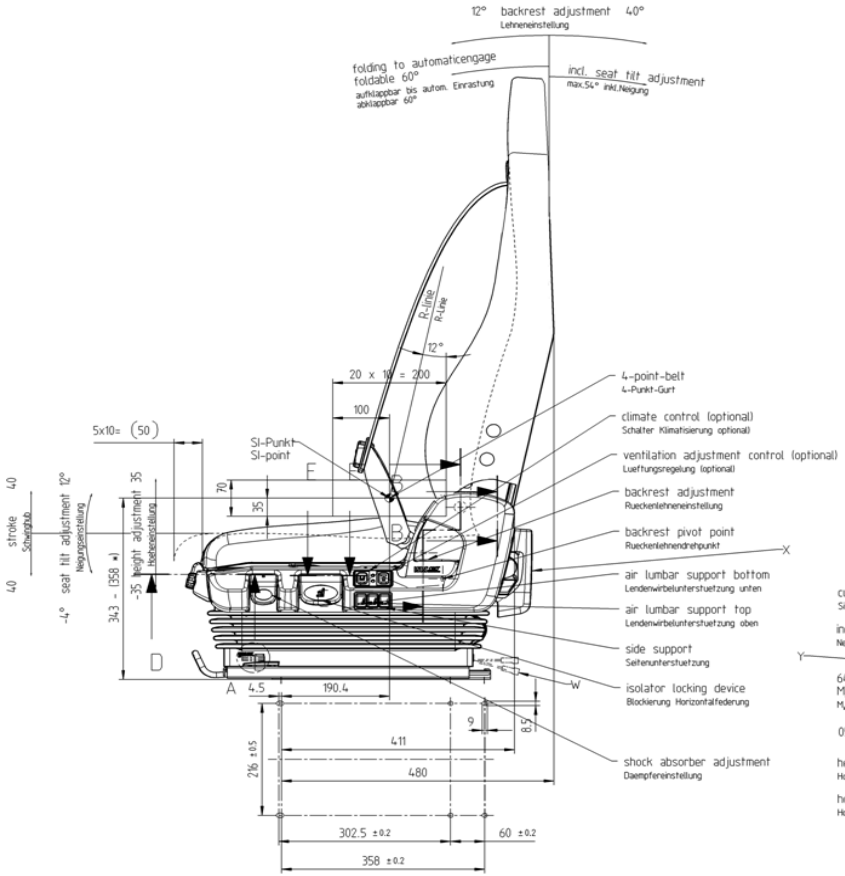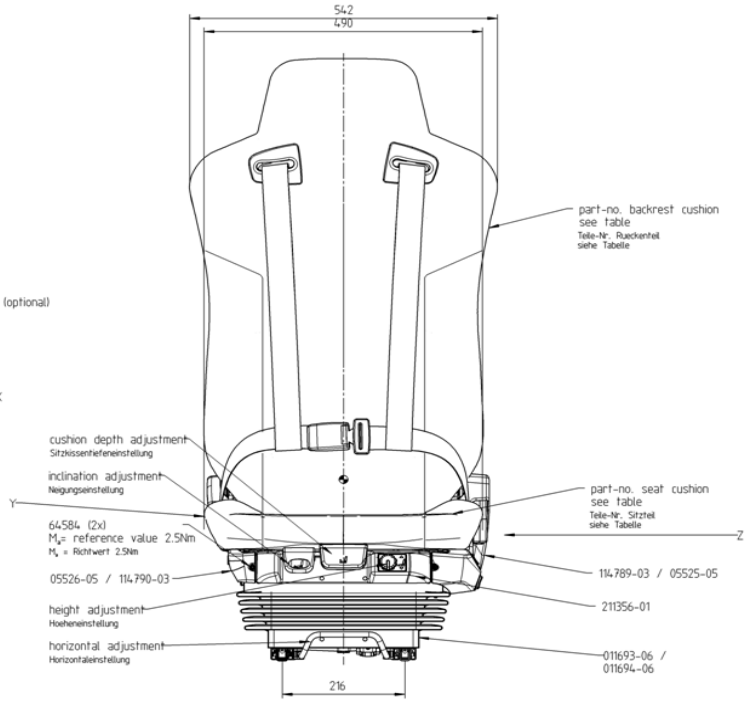
BASIS:	Built-in compressor	**Y**
	Weight classification variable, up to 150 kg	**Y**
	(with KA automatically / manually in KM)	
	Suspension travel 70 mm	**Y**
	tilt adjustment	**Y**
	Height adjustment (with memory function on KA)	**Y**
	adjustable shock absorber	**Y**
	Standard Cover TM-2238 / TU-2239	**Y**
Options:	Folding armrests and tilt adjustable	
	Heated 12/24V, with power switch	
	seat climate control	
	4Pt-Belt	**Y**
	Integral headrest, adjustable in inclination	**Y**
	Horizontal suspension	**Y**
	Intergrated pneumatic system (IPS), *with lumbar support*	**Y**
	and side bolsters on the backrest	
	Leatherette	
	Turntable	
	Can be adapted for control console